SALES DRAWING SALES DRAWING SALES DRAWING

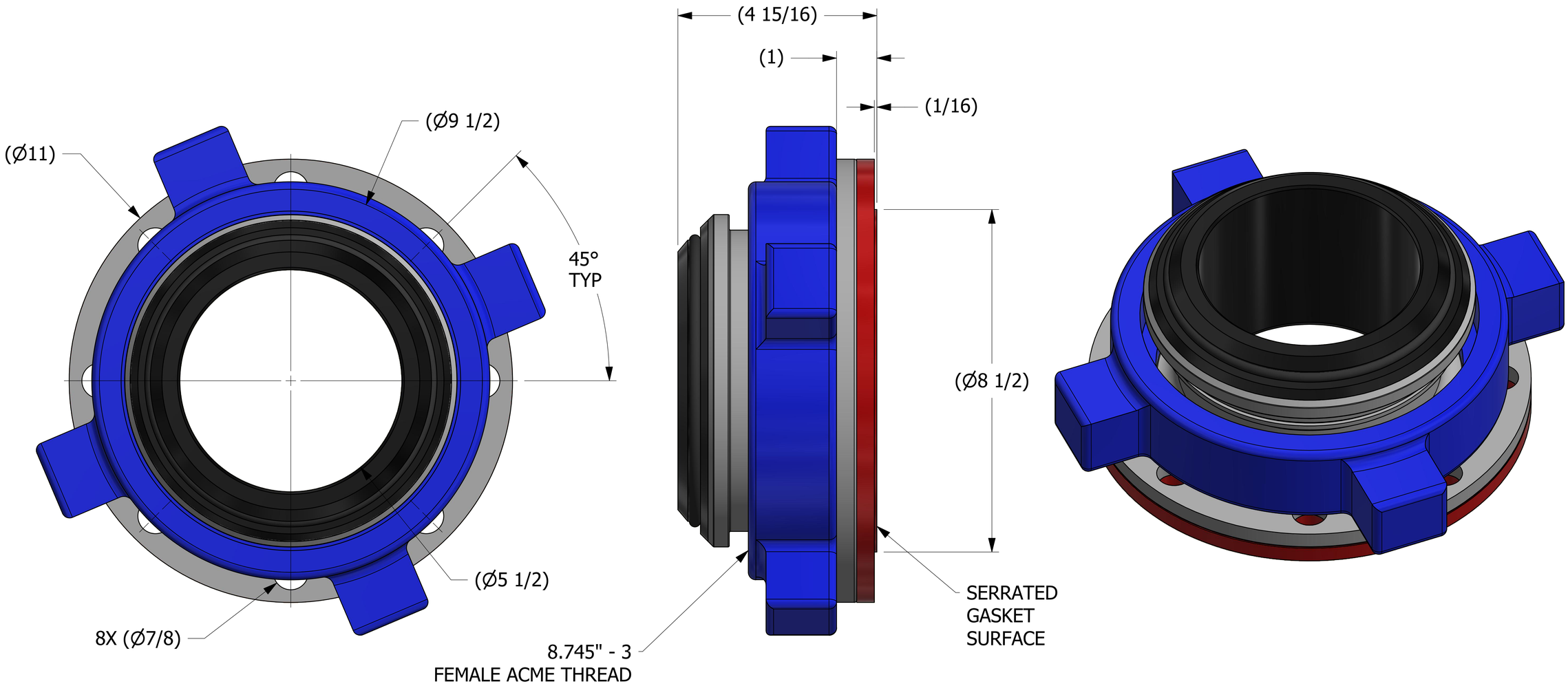

NOTES:
1. APPROXIMATE WEIGHT IS 40 LBS.
2. HAMMER UNION IS UNPAINTED.

REV	BY	DATE	REF #	PUB
A	WEB	4/7/20	202004070851	WEB

UNLESS OTHERWISE SPECIFIED DIMENSIONAL TOLERANCES
FRACTIONAL: ±1/16
X.XX: ±.03
X.XXX: ±.015
ANGULAR: ±1°
DEBURR ALL SHARP EDGES. ALL MACHINED SURFACES TO HAVE A 125 RMS FINISH UNLESS NOTED OTHERWISE.
THIRD ANGLE PROJECTION

DRAWN BY:	WEB
CHECKED BY:	EJF
PROTOTYPE DATE:	9/27/2019
APPROVED FOR PRODUCTION BY:	EJF
PRODUCTION DATE:	4/7/2020
SIZE:	E
DRAWING #:	49551

SALCO PRODUCTS, INC.

PART NAME: LINED HAMMER UNION MALE 6" FLANGED

MATERIAL: IRON/STEEL/BUNA/SALCO PE

PROJECT #: H161028T | SHEET #: 1 OF 1 | SCALE: 1 / 1

PART #: HSHU6FXM206

THIS PRINT, PROPERTY OF SALCO PRODUCTS INC, CONTAINS PROPRIETARY INFORMATION AND MUST NOT BE COPIED, REPRODUCED, OR USED DETRIMENTALLY TO OUR INTEREST.